UNIVERSITY INSTITUTE of COMPUTING
Asia's Fastest Growing University

NAAC GRADE A+ ACCREDITED UNIVERSITY

Experiment – 1B

Student Name: ABHISHEK KUMAR MISHRA
UID: 24MCA20464
Branch: MCA
Section/Group: 24MCA - 6B
Semester: 4
Date of Performance: 19 - 01 - 2026
Subject Name: Internet of Things Lab
Subject Code: 24CAP-751

AIM:
Design the circuit and WAP to interface the Switches and push buttons using pull-down and pull-up resistors with Arduino.

OBJECTIVE:

1. To understand the basic working of Arduino Uno in a virtual simulation environment.
2. To learn how to interface switches and push buttons with Arduino Uno using digital input pins.
3. To design circuits using pull-down and pull-up resistors to obtain stable input logic levels.
4. To write and upload Arduino sketches to read digital input signals from switches and push buttons.
5. To study the use of pinMode(), digitalRead(), and digitalWrite() functions in Arduino programming.
6. To observe the effect of button press and release on input pin states (HIGH and LOW).
7. To control an LED using a switch or push button based on pull-up and pull-down logic.
8. To gain hands-on experience with Tinkercad Circuits for circuit design, simulation, and testing.

INPUT / APPARATUS USED:

- Hardware Components
  1. **Arduino Uno** – Microcontroller board used to control the LED
  2. **LED (Light Emitting Diode)** – Output device for visual indication
  3. **Two Resistor (220Ω / 330Ω)** – Used to limit current and protect the LED
  4. **Breadboard** – For making temporary circuit connections
  5. **Voltage Meter / Multimeter** (for measuring voltage in the circuit)
  6. **Jumper Wires** – For connecting Arduino pins to LED and resistor
  7. **USB Cable** – To connect Arduino Uno with the computer (for power and programming)

- Software / Simulation Tool
  7. **Tinkercad** – Used to design, simulate, and test the LED interfacing circuit and patterns
  8. **Arduino Sketch (Program Code)** – Used as input to control LED blinking and patterns

Button with External Pull-Down Resistor

Component List

Name	Quantity	Component
R3 R4	2	1 kΩ Resistor
S2	1	Pushbutton
D2	1	Red LED
U2	1	Arduino Uno R3
Meter1	1	Voltage Multimeter

PROCEDURE:

This experiment is performed using the Tinkercad web application. The circuit is designed to interface switches and push buttons with the Arduino Uno using pull-down and up resistors. The pull-down and up resistors ensure that the input pins remain at a LOW logic level when the switches are not pressed. An Arduino program is written and executed to read the digital input states of the switches and push buttons and perform the required operation based on user input.

1. Open **Tinkercad Circuits** and create a new circuit.
2. Drag and place an **Arduino Uno** board in the workspace.
3. Place a **breadboard** and connect its power rails to the **5V and GND** pins of the Arduino.
4. Insert a **push button / switch** on the breadboard.
5. Connect the switch to **digital pin 2** of the Arduino.
6. For **pull-down configuration**, connect a resistor between **pin 2 and GND**, and connect the switch to **5V**.
7. For **pull-up configuration**, connect a resistor between **pin 2 and 5V**, and connect the switch to **GND**.
8. Insert an **LED** on the breadboard, ensuring correct polarity (anode and cathode).
9. Connect a **220Ω resistor** in series with the LED to limit current.
10. Connect the **anode of the LED** to **digital pin 13** of the Arduino.
11. Connect the **cathode of the LED** to the **GND** pin of the Arduino.

12. Add a **voltage meter (multimeter)** to observe voltage changes at the input pin.
13. Open the **code editor** and write the Arduino sketch for pull-down and pull-up configurations.
14. Use **pinMode()** to configure input and output pins.
15. Use **digitalRead()** to read the switch state and **digitalWrite()** to control the LED.
16. Start the **simulation** and press/release the switch to observe LED behavior.
17. Verify the **input pin voltage levels** during button press and release.
18. Stop the simulation after verifying correct operation.

CIRCUIT OF PULL-DOWN RESISTOR:

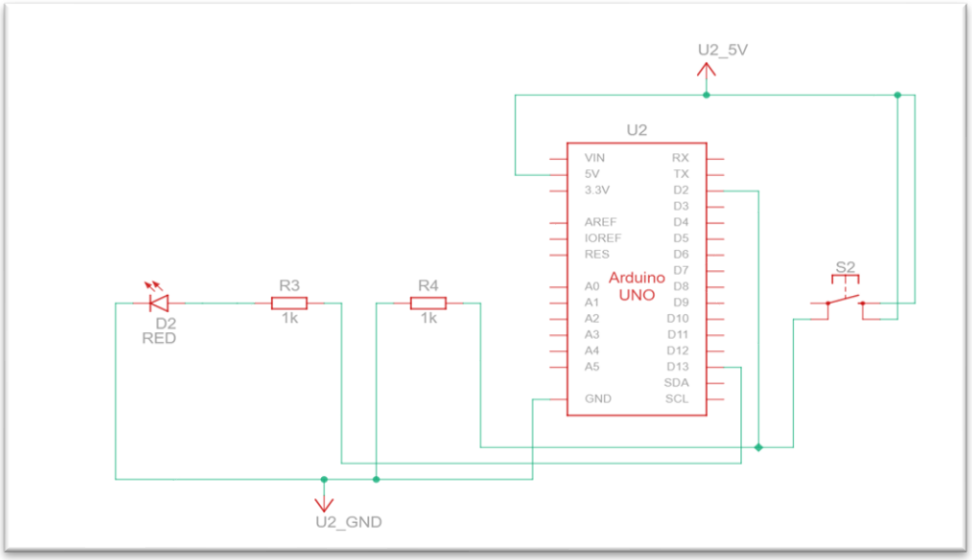

CIRCUIT OF PULL-UP RESISTOR:

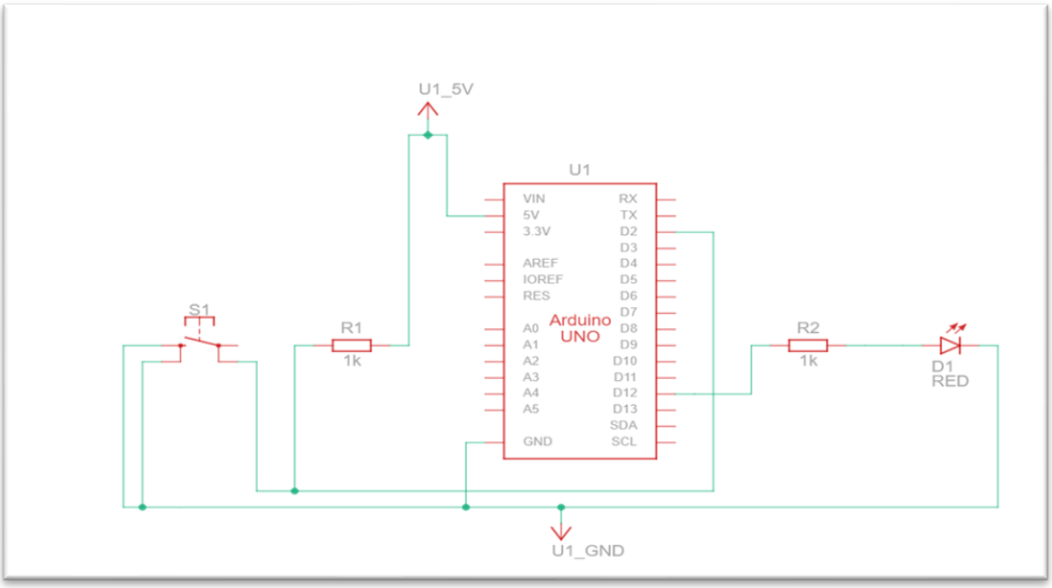

PROGRAM FOR SIMULATION FOR PULL-DOWN:

Text | 1 (Arduino Uno R3)

```
#define BUTTON_PIN_INPUT 2
#define LED_PIN_OUTPUT 12

void setup()
{
  pinMode(BUTTON_PIN_INPUT, INPUT);
  pinMode(LED_PIN_OUTPUT, OUTPUT);

  // Start Serial Communication
  Serial.begin(9600);
  Serial.println("Pull-Down Button Test Started");
}

void loop()
{
  int buttonState = digitalRead(BUTTON_PIN_INPUT);

  // Print button state
  Serial.print("Button State: ");
  if (buttonState == HIGH) {
    Serial.println("PRESSED (HIGH)");
    digitalWrite(LED_PIN_OUTPUT, HIGH);
    Serial.println("LED: ON");
  } else {
    Serial.println("RELEASED (LOW)");
    digitalWrite(LED_PIN_OUTPUT, LOW);
    Serial.println("LED: OFF");
  }

  Serial.println("--------------------------");
  delay(500);   // Delay so output is readable
}
```

OUPUT OF PULL-DOWN:

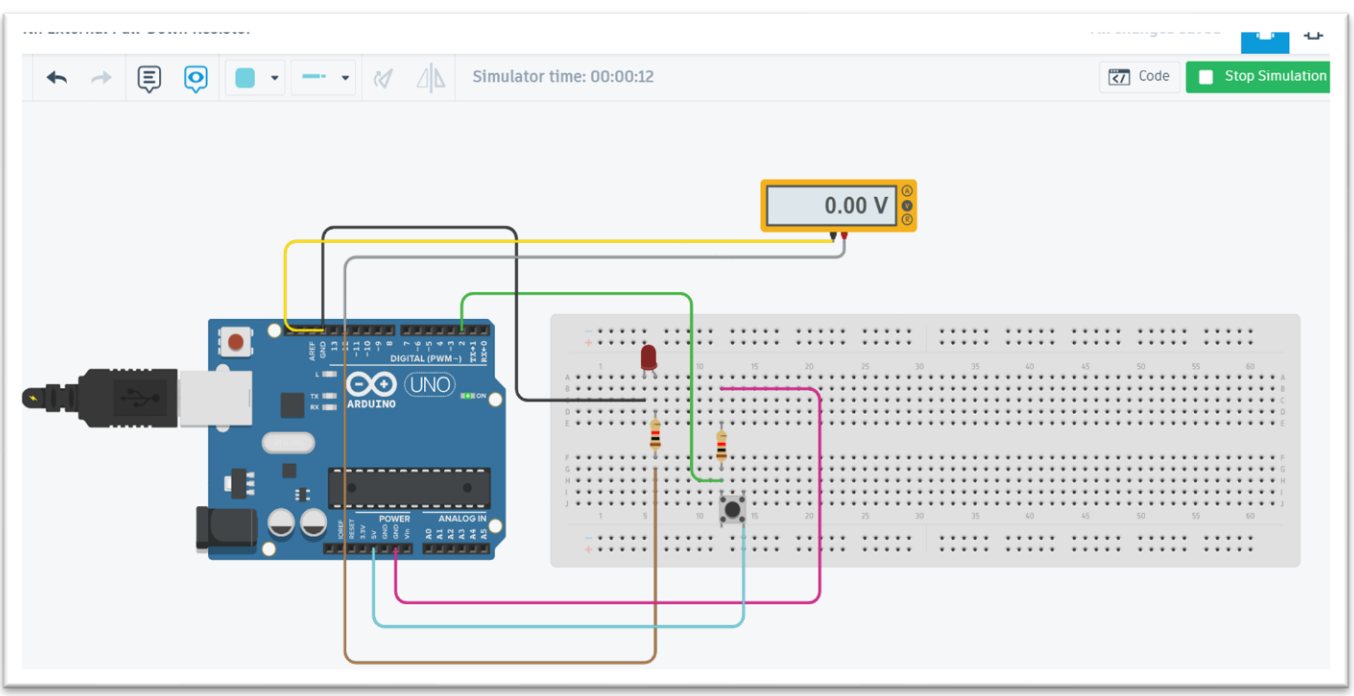

PROGRAM FOR SIMULATION FOR PULL-UP:

```
#define BUTTON_PIN_INPUT 2
#define LED_PIN_OUTPUT 12

void setup()
{
  pinMode(BUTTON_PIN_INPUT, INPUT);
  pinMode(LED_PIN_OUTPUT, OUTPUT);

  // Start Serial Communication
  Serial.begin(9600);
  Serial.println("External Pull-Up Button Test Started");
}

void loop()
{
  int buttonState = digitalRead(BUTTON_PIN_INPUT);

  // Print button state
  Serial.print("Button State: ");
  if (buttonState == LOW) {
    Serial.println("PRESSED (LOW)");
    digitalWrite(LED_PIN_OUTPUT, LOW);
    Serial.println("LED: OFF");
  } else {
    Serial.println("RELEASED (HIGH)");
    digitalWrite(LED_PIN_OUTPUT, HIGH);
    Serial.println("LED: ON");
  }

  Serial.println("-------------------------");
  delay(500);    // Delay so output is readable
}
```

OUPUT OF PULL-UP:

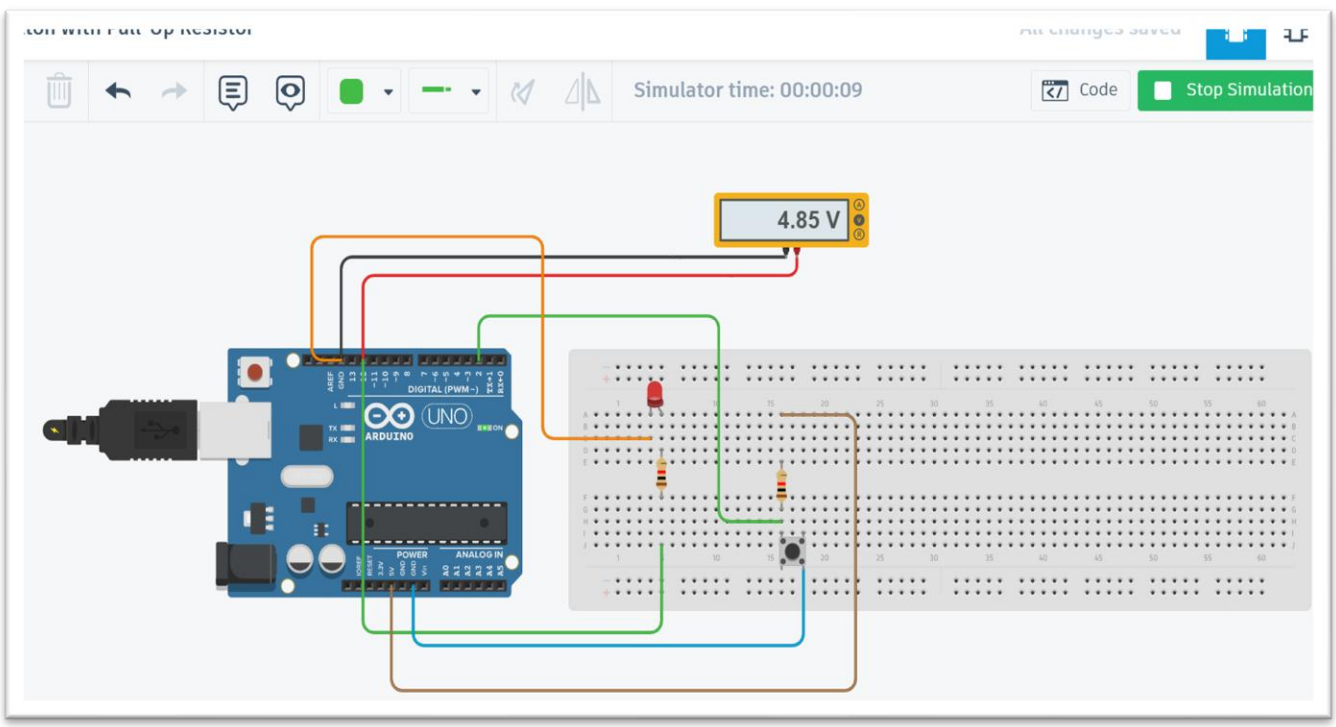

RESULT:

1. The circuit was successfully designed and simulated using Tinkercad.
2. The switches and push buttons were correctly interfaced with the Arduino Uno using both pull-down and pull-up resistors.
3. In the pull-down configuration, the input pin read a LOW logic level when the button was released and a HIGH logic level when the button was pressed.
4. In the pull-up configuration, the input pin read a HIGH logic level when the button was released and a LOW logic level when the button was pressed.
5. The LED connected to the Arduino responded correctly based on the switch input in both configurations.
6. The LED turned ON and OFF as per the programmed logic during button press and release.
7. The voltage meter confirmed the expected change in voltage levels at the input pin for both pull-down and pull-up circuits.

LEARNING OUTCOMES:

1. Understood the basic working of **Arduino Uno** in a virtual simulation environment.
2. Learned how to **interface switches and push buttons** with Arduino using digital input pins.
3. Understood the concept and purpose of **pull-down and pull-up resistors** in digital circuits.
4. Learned how pull-down and pull-up resistors help in **avoiding floating input conditions**.
5. Gained practical knowledge of **reading HIGH and LOW logic levels** using digitalRead().
6. Learned to control an **LED based on switch input** using Arduino programming.
7. Understood the difference in **input pin behavior** for pull-down and pull-up configurations.
8. Gained hands-on experience in **designing, simulating, and testing circuits using Tinkercad**.
9. Developed basic skills in **writing and executing Arduino programs** for input–output control.